RC10 B6.3 TEAM KIT

Driver:	Jamie/tommy	Event:	winter series
Date:	18/12/21	Track:	J16
Qualify:		TQ: ☐ Main:	Finish: Best Lap Time:

Reset Forms

Front Suspension:

Ride Height:	14
Camber:	-1
Toe:	none
Anti-Roll Bar:	none
Arm Type:	carbon
Tower Type:	kit (gull)
Wheel Hex:	kit
Steering Block:	4
Caster Block Insert:	5
Bulkhead Type:	steel
Kick-Up Angle:	25
Notes:	front camber link ground 1mm lower on inside

Bump Steer Spacing: 1

Ball Stud Spacing: 1

Axle Height:
+3 ☐
+2 ☐
+1 ■
0 ☐

Steering Plate: 0

Steering Stop Spacing: 0

Ball Stud Spacing: -1

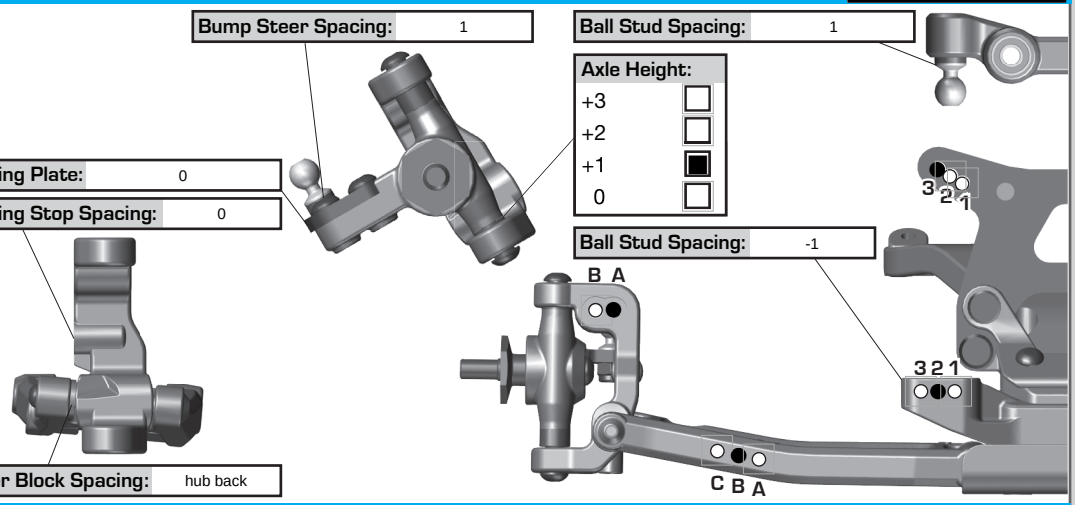

Caster Block Spacing: hub back

Rear Suspension:

Ride Height:	14
Camber:	-1
Anti-Roll Bar:	1.3
Arm Type:	75mm
Tower Type:	kit
Arm Spacing:	arm back
Wheel Hex:	6mm
Shock Mounting Position:	Front of Arm ■ Rear of Arm ☐
Hub Spacing:	Fwd ☐ Mid ☐ Back ■
CVA Bone Length:	69mm
CVA Axle Type:	kit
Notes:	B6.2 D plate 75mm rear arms

C Mount:
Aluminum ■ Brass ☐

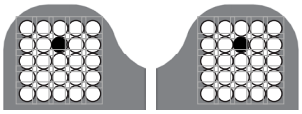

D Mount:
Aluminum ■ Brass ☐

Axle Height:

●	▼0	3▲	+3
○	▼1	2▲	+2
○	▲1	2▼	+1
○	▲0	3▼	+0

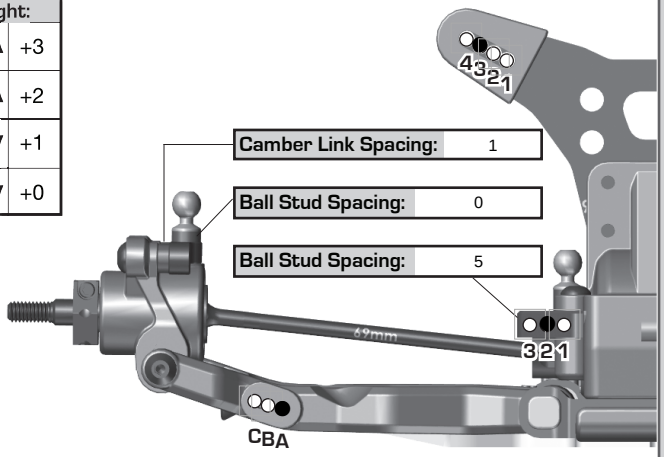

Camber Link Spacing: 1

Ball Stud Spacing: 0

Ball Stud Spacing: 5

Electronics:

Radio:	m17	Servo:	Reedy 1206
EPA:	Throttle: 100 %	Brake:	95 %
ESC:	Reedy 510r		
ESC Settings:			
Motor:	Reedy M4		
Wind:	5.0	Timing:	20
Pinion:	21	Spur:	78
Battery:	Reedy lcg 4100mAh		
Battery Position:	8mm moved forward		
Battery Weight:	20g weight		

Drivetrain:

Transmission:
Laydown: ■ Layback: ☐

Differential: Ball Diff: ☐
Height: 3 Gear Diff: ■
Gear Diff Mass: 10k 2 gear

Notes:

Slipper Clutch:

Type:	B6.3 carpet kit
# of Pads:	2
Setting:	

Shocks:

	Front	Rear
Piston:	3x1.4 Tapered	3x1.5 tapered
Fluid:	42.5	35
Spring:	Orange v2	Yellow v2
Limiters:	Int: 0 Ext: 0	Int: 0 Ext: 0
Stroke:	22mm	28mm
Eyelet Length:	short	extra long (+4)
Cup Offset:	+5	0
Notes:		

Track Info:

Size:	Small ☐	Medium ■	Large ☐	Extra Large ☐
Surface:	Dirt ☐	Carpet ■	Astroturf ☐	Multi Surface ☐
Traction:	Low ☐	Medium ☐	High ■	Very High ☐
Moisture:	Dry ■	Damp ☐	Wet ☐	
Condition:	Indoor ■	Outdoor ☐	Dusty ☐	Hard Packed ☐
	Bumpy ☐	Grooved ☐	Smooth ☐	Loamy ☐
Temperature:	Ambient:	Track:		
Notes:				

Tires:

Front Tires:	cut stagger
Front Compound:	yellow
Front Insert:	none
Rear Tires:	cactus
Rear Compound:	yellow
Rear Insert:	schumacher medium
Wheel (F/R):	AE
Notes:	outer and inner row off cactus

Body, Weight:

Body:	PL Axis
Front Wing:	kit
Rear Wing:	kit
Wing Angle:	3
Chassis Length:	short
Servo Weights:	steel
Electronic Weights:	steel
Total Vehicle Weight:	

Vehicle Comments: